35°(TROMP ESCALATORS)

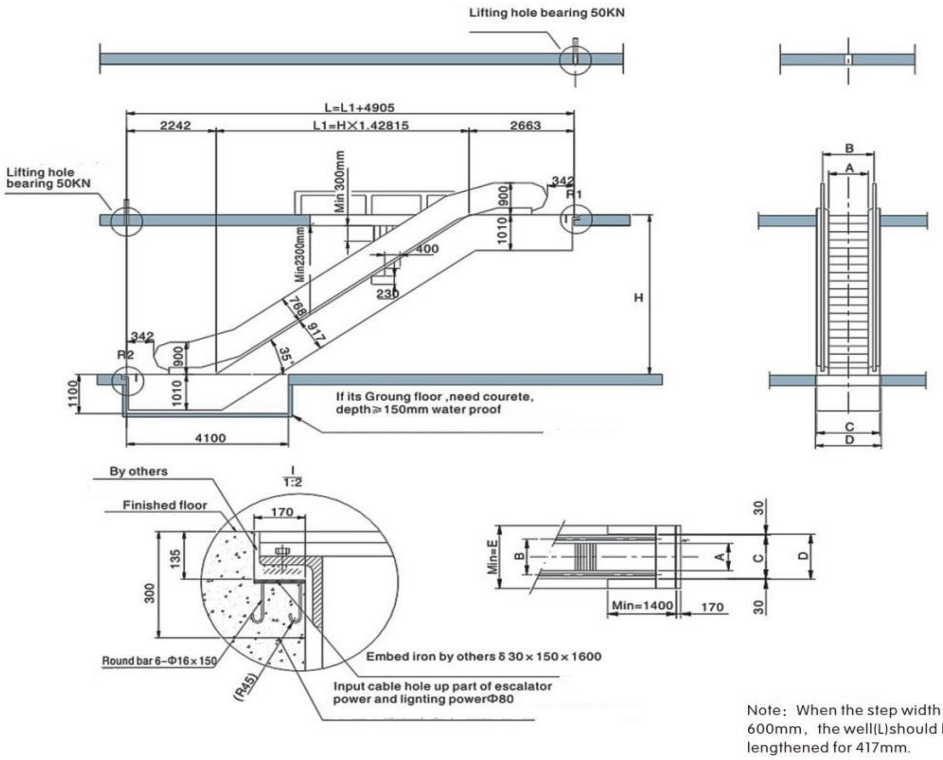

Note: When the step width is 600mm, the well(L)should be lengthened for 417mm.

Model No.	TMP 35-600 4500p/hour				TMP 35-800 6750p/hour				TMP 35-1000 9000p/hour			
Rising Height MM		Static Load		Motor		Static Load		Motor		Static Load		Motor
	N.W.	R1	R2	Power	N.W.	R1	R2	Power	N.W.	R1	R2	Power
	KN	KN	KN	KN	KN	KN	KN	KN	KN	KN	KN	KN
3000	57	46	41	5,5	59	52	47	5,5	60	56	50	5,5
3500	60	49	44	5,5	63	56	50	5,5	64	60	53	8
4000	64	52	47	5,5	67	60	54	5,5	67	64	57	8
4500	68	56	50	5,5	71	64	57	8	71	67	60	8
5000	71	59	53	8	74	68	60	8	74	71	64	11
5500	75	62	56	8	82	74	66	11	82	77	69	11
6000	79	65	59	11	86	78	69	11	85	81	72	11

Model No.	A	B	C	D	E
TMP 30-600	600	837	1200	1260	1837
TMP 30-800	800	1037	1400	1460	2037
TMP 30-1000	1000	1237	1600	1660	2237

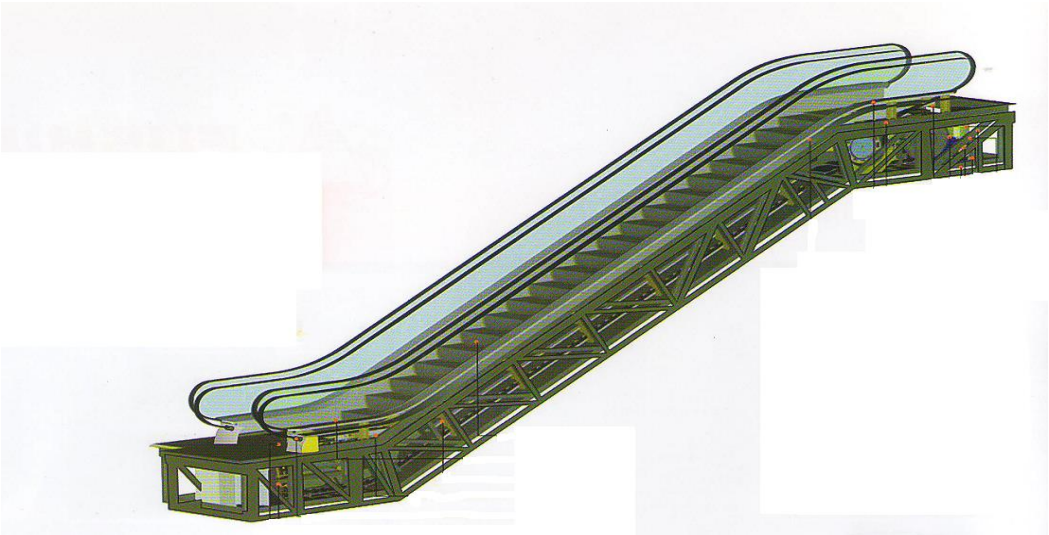

tromp.com.tr

t. + 90 212 522 11 33 (pbx)
f. + 90 212 746 56 10
e. info@birasansor.com

Kınalı Çorlu Yolu 4. Kilometre Çantaköy Mevkii Silivri İst. TR
TROMP, BİR ASANSÖR San. & Tic. Ltd. Şti. TESCİLLİ MARKASIDIR.